Office of Grants & Local Services
P.O. Box 942896
Sacramento, CA 94296-0001
(916) 653-7423

Procedural Guide for the TRAILS GRANT PROGRAM

under the California Wildlife Coastal and Park Land Conservation Bond Act of 1988

August 1988

State of California – The Resources Agency
DEPARTMENT OF PARKS AND RECREATION

PROCEDURAL GUIDE AND PROGRAM CRITERIA

FOR THE

TRAILS GRANT PROGRAM

CALIFORNIA WILDLIFE, COASTAL, AND PARK LAND
CONSERVATION BOND ACT OF 1988

State of California
Department of Parks & Recreation
1416 Ninth Street, Room 1449-1
P. O. Box 942896
Sacramento, CA 94296-0001

TABLE OF CONTENTS

	Page
INTRODUCTION	1
IMPORTANT POINTS	1
Eligible Applicants	2
Eligible Projects	2
Ineligible Projects	4
APPLICATION PROCEDURES	4
When to Apply	4
What to Submit	4
Selection and Notification	5
PROJECT ADMINISTRATION	5
Normal Grant Process	5
Total Withdrawal from Program	5
Changes to Approved Project	6
Time Extensions	6
Payments of Grant Funds	6
Income and Interest	6
Accounting Requirements	7
Eligible Costs	7
Ineligible Costs	9
PROJECT COMPLETION	10
STATE AUDIT	10
APPENDICES	
Appendix A, Application Form	11
Appendix B, Project Proposal	15
Appendix C, Sample Resolution	19
Appendix D, Development Procedures	23
Force Account Schedule	D-5
Handicapped Access Design Information	D-11
Appendix E, Acquisition Procedures	41
Appendix F, Payment Request Form	43
Appendix G, Support Material for Final Payment	47
Appendix H, Project Agreement	51
Appendix I, Addendum to CEQA	59

INTRODUCTION

This procedural guide will assist local government agencies and non-profit groups in applying for and administering grants from the Trails Grant Program, under Section 5907(5) of the California Wildlife, Coastal, and Park Land Conservation Bond Act of 1988 (Proposition 70). This is a $5 million competitive grant program for acquisition and development of lands and rights-of-way for bicycles, horseback riding, hiking, and handicapped access trails.

The $5 million will be available on a competitive basis over a two-year period. $2.5 million will be appropriated for Fiscal Year 1989/90 and $2.5 million for Fiscal Year 1990/91.

IMPORTANT POINTS

This grant program is administered by the California Department of Parks and Recreation (DPR). Day-to-day administration of individual projects is the responsibility of a project officer who is assigned a specific geographical area of the state, based on county boundaries. Processing will be expedited if the name of the project officer assigned to your area is included on all mail. All inquiries, correspondence, and grant applications should be addressed to:

Project Officer (Name)
California Dept. of Parks and Recreation
Local Assistance Section
1416 Ninth Street, Room 1449-1
P. O. Box 942896
Sacramento, CA 94296-0001
Telephone: (916) 445-4441
FAX: (916) 323-6586

1. Only project costs incurred after the date of appropriation will be eligible for grant funds. Projects will not be funded on a retroactive basis. After appropriation, you should still wait until you receive a fully executed agreement before starting your project.

2. DPR approval of acquisition and/or development documents is required under this program. For acquisition projects, a preliminary title report and appraisal should be submitted before the acquisition. For development projects, a complete bid package and/or a force account schedule should be submitted before development.

3. You must start the project within three years of the date the grant funds are appropriated in the state budget.

4. Grants may be audited at any time by DPR up to three years after project completion. AVOID AUDIT EXCEPTIONS - KEEP ACCURATE RECORDS OF ALL EXPENDITURES.

5. The funding for your project cannot be changed to a different site without prior DPR approval and state legislative approval.

6. Where necessary, up to 20% of the grant amount may be expended for nonconstruction costs such as plans and specifications, acquisition documents, construction inspections, and directly-related administrative costs.

7. Projects that involve construction of new or renovation of old facilities must provide access for the disabled in accordance with applicable State statutes (see Appendix D).

8. All applications shall contain evidence that the applicant has complied with the California Environmental Quality Act of 1970 (CEQA).

9. Project proposals for multiple sites are not eligible. (One application cannot be submitted for acquisition or development at more than one location). A separate application must be submitted for each project location.

Eligible Applicants

Local units of government and nonprofit organizations authorized to provide park, recreation, or open-space services or facilities to the general public are eligible to apply for funds under this statewide competitive program.

Eligible Projects

The following types of projects are eligible:

1. Acquisition

   Acquisition of readily accessible open space areas for trails is eligible. Acquisition may include developed or undeveloped parcels, fee title, less than fee title such as easements, rights of way, riparian rights, or any interest sufficient to accomplish project goals. Priority consideration should be given to open space areas with ready access to large numbers of the immediate population. Acquisition of lands and structures to be converted to recreation use is also eligible.

   Property acquired under the state grant program must comply with provisions of Chapter 16, Sec. 7260 of Div. 7, Title 1 of the Government Code, and state procedures established by the California Department of Parks and Recreation. This statute and state procedures require uniform relocation and acquisition procedures necessary in the acquisition of properties by any public entity.

   Because this program does not allow for the use of "eminent domain", it is quite likely that most acquisitions will take on the nature of voluntary sales. As such, they may not come under the Just Compensation provisions of Chapter 16. If the purchase of the property right anticipated is a voluntary sale, the best approach is to obtain an option to purchase early

in the process especially if the project involves more than one owner in the project area. Our Land Agent is available for technical assistance at (916) 322-9575.

The typical acquisition process could go something like this:

1. Trail alignment is planned and appraisal reports are prepared.

2. Property owners are contacted to determine their willingness to sell. Owners are at this time advised that there is to be no condemnation. (No. 1 or No. 2 could be interchangeable as far as timing is concerned since there can be no condemnation.)

3. Option agreements are obtained as evidence that owners are willing sellers.

4. Appraisals, options, and preliminary title reports are submitted for state approval.

5. Upon receipt of approval option is executed, property is acquired.

6. Final title documents (deed and title insurance if appropriate) is submitted to state in support of final billing.

   If you are contemplating a project involving acquisition, please contact the Local Assistance Section, (916) 445-4441 for an Acquisition Guide.

2. Development/Rehabilitation

Development of trail facilities that meets an identifiable recreation need, or that provides recreation opportunities not now available, is eligible. Facilities may include, but is not limited to, trails, staging areas, restrooms, bridges, and fencing.

Rehabilitation of trails or support areas that are no longer fully serviceable, and that, when rehabilitated, provide expanded or additional recreation opportunities, is also eligible. Rehabilitation may include improvement of facilities that are inoperative, unsafe, or allow only limited use, as well as improvements to provide expanded use by the disabled, or other groups.

Adequate tenure to the property is required for development projects. Adequate tenure means the applicant owns the land or holds a lease or other long-term interest that is satisfactory to DPR.

Ineligible Projects

1. Projects located on school properties that are expressly for educational purposes are ineligible.

2. Projects traditionally provided by the private, nongoverment sector or by concessionaires will be considered ineligible unless it can be shown that private entrepreneurs are unavailable to make such provisions and that the project is based on measurable need.

3. Master Planning for trails acquisition and development.

4. Highway beautification and parking for other than recreation purposes.

5. Operations and Maintenance

APPLICATION PROCEDURES

When to Apply

Applications must be postmarked no later than December 1, 1988 for the 1989/90 fiscal year allocation of $2.5 million. For the remaining $2.5 million for the 1990/91 fiscal year, applications are due September 15, 1989.

What to Submit

A complete application consists of one copy each of the items listed on the back of the Application Form (Appendix A).

When submitting your application materials, please note the following:

1. The justification for the project must be addressed in the project proposal (Appendix B).

2. The process for compliance with the California Environmental Quality Act must be started by the time the application is filed, and completed by final selection.

3. For the 1990/91 Fiscal Year, if you intend to reapply for the identical project, you need only submit:

   a. Addendum to CEQA (Appendix I)
   b. New application form
   c. New resolution

Selection and Notification

DPR will review each project application, conduct field inspections, and make final selections by March 1 of 1989 and 1990. The projects will be submitted for Legislative approval and inclusion in the State Budget for the upcoming fiscal year. Applicants will be notified of the final selections.

After the project is identified in the State Budget, funds usually become available for three years, during which time you must start the project. When the agreement between the state and the local agency is signed, two additional years are available in which to complete the project (a total of five years from the date of appropriation). Projects that can be initiated, completed, and made available for public use at an early date are preferred.

PROJECT ADMINISTRATION

Normal Grant Process

1. Applicant completes and submits applications to DPR.
2. If project is selected, the project is placed in the state budget. After funds are appropriated, five copies of an agreement are sent to applicant.
3. Applicant returns four signed copies of agreement to DPR.
4. A fully executed agreement is returned to applicant.
5. Applicant may submit payment request for an advance of 10% of grant amount to prepare construction plans and/or acquisition documents (Appendix F).
6. Acquisition and/or development documents are submitted to DPR for review and approval (Appendix D or E).
7. Applicant commences work on project, and submits payment request for up to 90% of grant amount.
8. After completion of project, applicant submits support materials (Appendix G) and request for final 10% of grant.
9. Project officer makes final project inspection.
10. DPR may perform an audit of completed project.

Total Withdrawal From Program

If a jurisdiction or non-profit organization withdraws from the program or elects not to use its grant funds, the allocation will be lost to that jurisdiction or organization and revert back to the Trails Grant Program. In the event an approved project cannot be completed, and if grant funds were advanced, those funds plus any accrued interest must be returned to the state.

Changes to Approved Project

Major scope changes will normally not be approved for these competitive projects. Minor modifications may be acceptable with adequate written justification and DPR approval.

Time Extensions

A request for a time extension and its justification must be submitted to the DPR. The DPR will determine whether the circumstances warrant a time extension.

Payments of Grant Funds

After DPR has signed the agreement, 10% of the total grant amount may be requested for specific planning for each development project. Up to 90% of the total grant or 100% of the actual development cost, whichever is less, may be requested after the construction contract is awarded or construction has commenced.

For acquisition projects, up to 90% of the grant or 100% of the actual acquisition cost, whichever is less, may be advanced after the property is in escrow. Such advance shall be placed immediately into escrow.

The remaining 10% will usually be reimbursed after completion of the project.

If advances are made and not immediately used, the advanced funds should be placed in a separate interest-bearing account. The applicant shall be held accountable for the interest earned.

Applicants should allow four to six weeks to receive payment after submitting request for payment. When completing the payment request forms, all figures should be rounded to the nearest dollar.

Income and Interest

Any income accruing from intended recreational use of the project may be spent at the applicant's discretion, consistent with the jurisdiction's normal procedure.

Gross income that is earned by the applicant from non-recreational uses of an acquisition project must be used by the applicant for any of the following at the project site: recreation development, additional acquisition, operation, or maintenance.

Gross income that accrues to a grant-assisted development project during and/or as a part of the construction, from sources other than the intended recreation use, shall also be used for further development of that particular project.

If the gross income and earned interest are not used for additional acquisition, development, operation, or maintenance of the project, such income and interest shall be returned to the state, and/or the amount of the state grant shall be reduced by the amount of such income and interest.

Gross income includes the fair market value of real and/or personal property, or personal services received in exchange for nonrecreational activity conducted on the land acquired and/or to be developed.

Accounting Requirements

The applicant must maintain an accounting system that accurately reflects fiscal transactions, with the necessary controls and safeguards. This system should provide good audit trails, especially the source of original documents such as receipts, progress payments, invoices, time cards, etc. The system must also provide accounting data so the total cost of each individual project can be readily determined. These records must be retained for a period of three years after final payment is made by the state. AVOID AUDIT EXCEPTIONS - KEEP ACCURATE RECORDS

Eligible Costs

Only project-related costs incurred during the project performance period specified in the grant agreement will be eligible. All such costs must be supported by appropriate invoices, purchase orders, cancelled warrants, and other records. Any funds spent for nonacquisition or nonconstruction purposes reduce the amount of usable facilities available for public use. Therefore, no more than 20% of grant funds shall be spent on eligible nonconstruction or nonacquisition costs such as administration, preparation of plans and specifications, appraisals, etc.

1. Preliminary costs - Preliminary project costs (e.g., construction plans, appraisals, acquisition negotiations, etc.) incurred after the date of appropriation (i.e., passage of the State Budget that includes the project) are eligible, provided that an agreement for the project is executed by the state and the applicant.

2. Personnel or employee services - Services of the applicant's employees directly engaged in project execution are eligible costs. These costs must be computed according to the applicant's prevailing wage or salary scales, and may include fringe benefit costs such as vacations, sick leave, social security contributions, etc. that are customarily charged to the applicant's various projects. Costs charged to the project must be computed on actual time spent on a project, and supported by time and attendance records describing the work performed on the project. Overtime costs may be allowed under the applicant's established policy, provided that the regular work time was devoted to the same project.

Salaries and wages claimed for employees working on state grant funded projects must not exceed the applicant's established rates for similar positions.

3. Consultant services - The costs of consultant services necessary for the project are eligible. Consultants must be paid by the customary or established method and rate of the applicant.

   No consultant fee may be paid to the applicant's own employees without prior approval or unless specifically agreed to by the state.

4. Construction equipment - Equipment owned by the grant recipient may be charged to the project for each use. Equipment use charges must be made in accordance with the applicant's normal accounting practices. The equipment rental rates published by the State Department of Transportation may be used as a guide.

   If the applicant's equipment is used, a report or source document must describe the work performed, indicate the hours used, relate the use to the project, and be signed by the operator and supervisor.

   Equipment may be leased, rented, or purchased, whichever is most economical. If equipment is purchased, its residual market value must be credited to the project costs on completion.

5. Construction supplies and materials - Supplies and materials may be purchased for a specific project or may be drawn from a central stock, providing they are claimed at a cost no higher than that paid by the applicant. When supplies and/or materials are purchased with the intention of constructing a piece of equipment, a structure or a part of a structure, the costs that are charged as supplies and materials may be capitalized according to the applicant's normal practice or policy. If capitalized, only that cost reasonably attributable to the project may be claimed under the project.

6. Signs and interpretive aids - The cost of signs, display boards, or other minor interpretive aids relating to the project are eligible.

7. Construction - The cost of all necessary construction activities, from site preparation (including demolition, excavation, grading, etc.) to the completion of a structure or facility is eligible.

8. Acquisition - Costs of acquiring real property are eligible and may include the purchase price of the property, appraisals, surveys, preliminary title reports, escrow fees, title insurance fees.

9. Relocation costs - Relocation costs are allowable for projects that result in displacement of any person and/or business. The applicant must comply with the requirements of the State Relocation Act (Chapter 16 Government Code, Section 7260 et seq.)if applicable, even if relocation costs are not claimed for reimbursement.

10. Fixed Equipment - Purchase of equipment that is affixed permanently to the facility in question. An example is a sound system installed in a community center.

11. Other expenditures - In addition to the major categories of expenditures, reimbursements may be made for miscellaneous costs necessary for execution of the project. Some of these costs are:

    a. Communications (such as telephone, telegrams, letters, etc.)

    b. Premiums on hazard and liability insurance to cover personnel and/or property

    c. Work performed by another section or department of the applicant's agency

    d. Transportation costs for moving equipment and/or personnel

Ineligible Costs

The following is a nonexclusive list of ineligible costs:

1. Indirect costs (overhead)

2. Ceremonial expenses

3. Expenses for publicity

4. Bonus payments of any kind

5. Charges for contingency reserves or other similar reserves

6. Charges in excess of the lowest bid, when competitive bidding is required by the state or the applicant, unless the state agrees in advance to the higher cost

7. Charges for deficits or overdrafts

8. Taxes for which the applicant would not have been liable

9. Charges incurred contrary to the policies and practices of the applicant

10. Interest expense

11. Damage judgments arising from acquisition, construction or equipping of a facility, whether determined by judicial process, arbitration, negotiation, or otherwise

12. Services, materials, or equipment obtained under any other state program

13. Cost of discounts not taken

14. Travel claimed when no work time was claimed for the same period

15. Contract cost overruns, not approved, that exceed the allowable amount as per the contract specifications

16. The surcharge payable by the applicant for a project in which there is federal participation

17. Costs associated with the preparation of park master plans

18. Non-Fixed Equipment - Purchase of non-fixed or portable equipment. An example is a portable sound system that may be used in a community center.

PROJECT COMPLETION

There are a number of cost-supporting documents needed after project completion. See Appendix G, Support Material for Final Payment, for a complete list of the items that must be submitted to close out a project and receive final payment.

STATE AUDIT

After completion of the project, the state may audit the project records. The purpose of the audit is to verify that project expenditures were properly documented. The audit would be requested by the state after the final payment request has been received, all project transactions have been completed, and the necessary payments have been made by the applicant.

If your project is scheduled for audit, you will be contacted in advance. The audit should include all books, papers, accounts, documents, or other records of the applicant, as they relate to the acquisition or development project for which state funds were granted. Projects may be audited at any time up to three years after project completion.

To expedite the audit, the applicant should have the project records, including the source documents and cancelled warrants, readily available. The applicant should also provide an employee having knowledge of the project and the accounting procedure or system to assist the state auditor. The applicant shall provide a copy of any document, paper, record, or the like requested by the state auditor.

All project records must be retained by the applicant for a period of not less than one year after the state audit or final disposition of any disputed audit findings.

APPENDIX A

Application Form

State of California — The Resources Agency
DEPARTMENT OF PARKS AND RECREATION

CALIFORNIA WILDLIFE, COASTAL, AND PARK LAND CONSERVATION PROGRAM APPLICATION

This Form and Required Attachments Must Be Submitted for Each Project Site

PROGRAM TYPE *(check one below)*

- ☐ Per Capita
- ☐ Special District *(not qualifying for Per Capita)*
- ☐ Trails

PROJECT NAME	AMOUNT OF GRANT REQUESTED *(Minimum Grant — $20,000 except Trails)* $	
	ESTIMATED TOTAL PROJECT COST *(State Grant and other funds)* $	
GRANT APPLICANT *(Agency and address-incl. zip code)*	COUNTY	NEAREST CITY
	PROJECT ADDRESS	
	NEAREST CROSS STREET	
	SENATE DISTRICT NO.	ASSEMBLY DISTRICT NO.

Grant Applicant's Representative Authorized in Resolution

Name *(type)* _____ Title _____ Phone _____

Person with day-to-day responsibility for project *(if different from authorized representative)*

Name *(type)* _____ Title _____ Phone _____

Brief description of project

For Dev. projects Land Tenure — Project is: _____ acres:

_____ Acres owned in fee simple by Grant Applicant

_____ Acres available under a _____ year lease

_____ Acres other interest *(explain)* _____

For Acquisition projects Projects land will be _____ acres

_____ Acquired in fee simple by Grant Applicant

_____ Acquired in other than fee simple *(explain)* _____

I certify that the information contained in this project application form, including required attachments, is accurate and that I have read and understand the important information and assurances on the reverse of this form.

Signed _____ Date _____
Grant Applicant's Authorized Representative as shown in Resolution

I certify that this project is consistent with the park and recreation element of the applicable city or county general plan or the district park and recreation plan and will satisfy a high priority need.

Signed _____ Date _____
Representative of Grant Applicant's Planning Agency
(For nonprofit agency, Authorized Representative as shown in Resolution)

DPR 807 (8/88)

IMPORTANT

Before you incur costs against the grant, the funds must be appropriated by the Legislature. All State requirements must be met and an agreement signed before any funds will be disbursed.

An audit may be performed before or after final payment.

An Application for grant funds consists of one copy each of the following:

1. Application Form.
2. Authorizing Resolution from governing body.
3. Environmental Impact Report or Negative Declaration along with a response from the State Clearinghouse; and a copy of the Notice of Determination filed with, and stamped by, the County Clerk; or if applicable, a copy of the Notice of Exemption on file with the County Clerk if the project is categorically exempt.
4. Project location map (city or county) with enough detail to allow a person unfamiliar with the area to locate the project.
5. Evidence of adequate land tenure (lease, joint powers agreement, etc.).
6. Acquisition map showing exterior boundaries and parcel numbers.
7. Site plan (development projects).
8. Acquisition Schedule (acquisition projects).
9. Cost Estimate (development projects).
10. Indication of amount, type and source of funds above grant provided by applicant.
11. Permit or comments from the following, if applicable:

    State Lands Commission

    San Francisco Bay Conservation and Development Commission (BCDC)

    Regional Coastal Zone Protection Commission

    Corps of Engineers
12. All leases, agreements, etc., affecting project lands or the operation and maintenance thereof.
13. Completed project proposal for Special District and Trails Programs.
14. Photos of project site if Special District or Trails Program.
15. Articles of incorporation if nonprofit applicant.

ASSURANCES

Applicant possesses legal authority to apply for the grant, and to finance, acquire, and construct the proposed project; that a resolution, motion or similar action has been duly adopted or passed as an official act of the applicant's governing body authorizing the filing of the application, including all understandings and assurances contained therein, and directing and authorizing the person identified as the official representative of the applicant to act in connection with the application and to provide such additional information as may be required.

Applicant will maintain and operate the property acquired, developed, rehabilitated, or restored with the funds in perpetuity. With the approval of the granting agency, the applicant or its successors in interest in the property may transfer the responsibility to maintain and operate the property in accordance with section 5919 of the Public Resources Code.

Applicant will use the property only for the purposes of the Wildlife, Coastal, & Park Land Conservation Act and to make no other use, sale, or other disposition of the property except as authorized by specific act of the Legislature.

Applicant will give the State's authorized representative access to and the right to examine all records, books, papers, or documents related to the grant.

Applicant will cause work on the project to be commenced within a reasonable time after receipt of notification from the State that funds have been approved and that the project will be prosecuted to completion with reasonable diligence.

Applicant will comply where applicable with provisions of the California Environmental Quality Act and the California Relocation Assistance Act, and any other state, and/or local laws, rules and/or regulations.

APPENDIX B

Project Proposal

TRAIL GRANT PROJECT PROPOSAL

The information provided through the project proposal will permit the Department of Parks and Recreation (DPR) to evaluate projects relative to other competing grant projects. In addition to striving for objectivity and uniformity in the application of the criteria ranking, DPR will make every effort to ensure the geographic spread of grant funds throughout the state.

Please provide a written narrative answering each question or statement as it pertains to your project in the order presented in the following outline:

I. BASIC ELIGIBILITY

A. Are you a local unit of government authorized to provide park, recreation services and/or open space services or facilities to the general public?

OR

B. Are you a non-profit group who meets the following definition?

"5092(h) `Non-profit organization' means any charitable organization described in Section 501(c)(3) of the federal Internal Revenue Code, which has among its primary purposes the conservation and preservation of wetlands or of lands predominately in their natural, scenic, historical, agricultural, forested or open-space condition."

NOTE: Non-Profit organizations formed to provide or expand trail opportunities are considered eligible.

1. Is your organization tax exempt as determined by the Internal Revenue Service? If yes, attach a copy of the letter of exempt status.

2. Please attach a copy of your charter or articles of incorporation.

3. Are there any specific requirements/restrictions for membership or participation in the organization's activities or facilities by the general public?

II. RANKING CRITERIA

The following criteria were developed based upon public hearings.

A. NEED FOR THE PROJECT (40 Points)

1. Why should this particular project be funded? (Cite studies, reports or other data that supports your application).

2. Is there a deficiency of similar opportunities?

3. Who will be served by this project and what is the estimated use?

4. Is your project being supported by any other non-profit groups, public agencies, or citizen groups? If so, list them and attach letters of support. Is there support for the project (outside funding, donated materials, volunteer labor, trail patrols).

5. Is the project consistent with the Statewide Trails Plan, or city, county, or regional master plans?

6. Would this project connect or compliment other trails?

7. Are there any additional characteristics that would contribute to the need for this trail (e.g. valuable historic, cultural, geographical or scenic reasons)?

B. ACCESS (20 Points)

1. What is the available access (e.g. public transportation, bicycle lanes, horse staging areas, etc.)

2. Will the project improve access and/or safety?

3. Would the project be able to be used by persons of all abilities?

4. Does the project provide access to parks, shorelines, recreation sites, or other open public lands?

C. ORGANIZATIONAL CAPABILITY (20 Points)

1. What is your experience in developing, operating, or maintaining this type of project or other recreation projects?

2. How do you propose to maintain and operate the project?

D. PROJECT READINESS (20 Points)

1. How soon after funds become available can the project be started?

2. For development projects, have construction plans already been prepared?

3. For acquisition projects:

   a. Is there a willing seller?

   b. Do you have an option to purchase?

   c. Do you have a preliminary title report available?

APPENDIX C

Sample Resolution

SAMPLE RESOLUTION

Resolution No:_____

RESOLUTION OF THE_____
(Title of Governing Body/City Council, Bd. of Supervisors)
OF_____APPROVING THE APPLICATION FOR GRANT FUNDS
(City, County, District)
FOR THE TRAIL GRANT PROGRAM UNDER THE CALIFORNIA WILDLIFE, COASTAL, AND PARK LAND CONSERVATION ACT OF 1988 for the following project(s).

_____ _____
_____ _____
_____ _____
(Attach separate sheet for additional projects)

WHEREAS, the people of the State of California have enacted the California Wildlife, Coastal, and Park Land Conservation Act of 1988, which provides funds to the State of California and its political subdivisions for acquiring and/or developing facilities for public recreational and open space purposes; and

WHEREAS, the State Department of Parks and Recreation has been delegated the responsibility for the administration of the program within the state, setting up necessary procedures governing application by local agencies under the program; and

WHEREAS, said procedures established by the State Department of Parks and Recreation require the applicant to certify by resolution the approval of application(s) before submission of said application(s) to the state; and

WHEREAS, said application(s) contain assurances that the applicant must comply with; and

WHEREAS, the applicant will enter into an agreement with the State of California for acquisition or development of the project(s);

NOW, THEREFORE, BE IT RESOLVED that the_____hereby:
(Title of Governing Body)

1. Approves the filing of an application for the Trails Grant Program under the California Wildlife, Coastal, and Park Land Conservation Act of 1988 state grant assistance for the above project(s); and

2. Certifies that said applicant understands the assurances and certification in the application form; and

3. Certifies that said applicant has or will have sufficient funds to operate and maintain the project(s); and

4. Appoints the _____as agent of the
(Title - not name)
_____to conduct all
(City, County, District, or Non-Profit Organization)
negotiations, execute and submit all documents, including, but not limited

negotiations, execute and submit all documents, including, but not limited to applications, agreements, amendments, payment requests and so on, which may be necessary for the completion of the aforementioned project(s).

Approved and Adopted the _____day of _____, 19_____.

I, the undersigned, hereby certify that the foregoing Resolution Number _____ was duly adopted by the _____ (City Council, Bd. of Supervisors, _____following roll call vote: District Board or Governing Body)

Ayes:

Noes:

Absent:

_____
(Clerk)

APPENDIX D

Development Procedures

INTRODUCTION

Property developed under the grant programs administered by the California Department of Parks and Recreation, Local Assistance Section, should be developed in accordance with these guidelines. This Section has the responsibility to ensure that funds are expended in a manner consistent with state law, and to ensure that the development will provide recreation facilities that will be safe and secure for public use at a reasonable cost. (For information on project administration, obtain the individual procedural guides for the programs involved.)

The following procedures have been developed to create a framework that will permit the orderly and expeditious processing of materials and documents requiring state review and approval. The applicant should adhere to all procedures unless exceptions are approved in advance by the Department of Parks and Recreation.

Laws affecting development by public agencies are continually being added to or amended. It is your responsibility to be aware of all current laws and to conform to them.

When federal funds are involved with a state project, their standards also have to be followed, with the stricter requirement prevailing. For instance, in the case of handicap standards, the state requirements are currently more stringent, whereas the federal government has more stringent affirmative action standards. In some cases, both standards may have to be followed. If Federal Land and Water Conservation Fund grants are involved, the Department of Parks and Recreation will provide development procedures for that program.

DEFINITIONS

Department:	California Department of Parks and Recreation.
Prevailing Wage:	Minimum wage rates that must be paid for certain types of work as established by State Labor Code, Part 7, Chapter 1, Article 2, Sections 1770 and 1773.
Force Account:	Construction using the applicant's own work force, volunteer labor or, in some cases, individuals paid on a time and material basis.
Bidder:	Any individual, firm, co-partnership or corporation submitting a proposal for the work contemplated, acting directly or through a duly authorized representative.
Contractor:	The party of the second part, or his duly authorized agent, entering into contract with the applicant for performance of the work described by plans and specifications.
Plans:	The detail drawings or exact reproductions which show location, character, layout, dimensions and details of the work to be constructed under the contract.

Specifications: All written directions, provisions and requirements governing the methods and procedures to be followed in connection with bidding and award of contract and performance and execution of the work, the quantities and qualities of materials to be used, the method of measurement of the quantities of work and the nature of the contractual relationships that will exist during the course of the work.

Notice of Completion and Acceptance of Work for Each Contract: A formal, written statement filed by the applicant at the completion of the contract which states that the work has been completed and is acceptable to the applicant. (The form is provided by the applicant.)

PROGRAM PROCEDURES

The procedures below should be followed unless specific exceptions have been granted in advance by the State:

1. State approval in writing of plans and specifications (including bid conditions) may be required before starting any work on the project or awarding a contract for the work. (Check the procedural guide for the specific grant program.)

2. For development projects constructed under contract, submit one complete set of contract documents (construction drawings, bid documents, contract specifications) and an itemized engineer's estimate of construction costs for each contract. Allow three to four weeks for written approval.

3. For development projects constructed by force account, submit one set of approved plans drawn to scale, a force account schedule and a breakdown of costs (Sample, Page D-5). NOTE: You may receive up to a 90% advance from the Department after approval of plans and specifications or force account schedule after the start of the project.

There are several items that often cause problems in the engineering review. They are discussed below so that you (and your designers) will be aware of them.

Handicap Standards

Handicap standards have changed frequently. The standards that the state enforces are generally more strict and detailed than the federally-adopted requirements published by the American National Standards Institute or than those found in the Uniform Building Code. The applicable state standards are set by the Office of the State Architect as required by California Laws, Chapter 7, commencing with Section 4450, Division of Title I of the Government Code.

All new structures, additions, structural repair and alterations must adhere to the handicapped standards. On all remodeling jobs, the area of the remodel must comply plus there must be an accessible path of travel to the remodeled area and the restrooms, telephones, and drinking fountains that serve the remodeled area must also be made accessible. Minor repairs such as replacing fixtures, rewiring, air conditioning, patching, replumbing, painting, reroofing, or

replacing floor coverings do not normally trigger the accessibility laws as long as no remodeling is done in the process. Also, certain minor changes which improve handicapped access can be done without triggering the requirement that other work be done, i.e. a building entrance can be made accessible, a toilet modified, railings modified, all without other work being required.

The restoration of historic buildings in some cases may be exempted from the handicap codes or subject to more lenient requirements by having the State Historic Commission in the Office of the State Architect review the plans and specifications.

Structural Items

Plans must be signed by a registered civil or structural engineer or a licensed architect when structural items are involved. This includes the signature and the license number of the person who is legally responsible for the design of the proposed structure. A landscape architect cannot legally sign the plans for structural items except for wood frame structures with clear spans of 24 feet or less and retaining walls that are 4 feet high or less. Structural items include concrete, masonry, brick and structural steel constructions (other than freestanding fences and walls) that can land on somebody or drop someone more than 6 feet if they collapse. (Children's play equipment is generally <u>not</u> a structural item.)

Prevailing Wage Rates

Contractors must pay the prevailing wage rates as determined by the Labor Statistics and Research Division of the Department of Industrial Relations. The general bid conditions must reflect the need to pay the prevailing wage rates (which are generally based on union contracts). The prevailing wage rates can be obtained from the Department of Industrial Relations and are usually mailed to contractors, cities and counties. For a copy of the wage rates, write to: Labor Statistics and Research, P. O. Box 603, 455 Golden Gate Avenue, San Francisco, CA 94101.

Backflow Preventer

Health departments generally require approved backflow prevention devices on irrigation systems to prevent contamination of domestic water systems by poisons and fertilizer that might be drawn into the pipes through sprinkler heads. Even when the preventers are not required by county public health, it is the Department's policy not to advance funds unless the devices are included. (Obviously, backflow preventers are not required where the irrigation system is completely separate from the domestic water systems in the area as, for instance, where a local pond or treated sewage is used for irrigation water.)

Name Brands

When an item is specified by a brand name rather than by a full technical specification, California Government Code, Section 4380, requires that at least two brand names followed by "or equal" be called out in the specifications or plans. The only exceptions are where the applicant is matching an existing system or where a unique item with no known equal is needed.

GENERAL RECOMMENDATIONS

Check with your legal counsel to determine the bidding requirements that will be necessary. For "small" projects, simpler agreement forms and informal bid procedures may be allowed. A "small" contract is usually defined as being less than $5,000 to $15,000 depending on whether the applicant is a city, county or which type of special district it is. However, some types of special districts have limits as low as $500.

Plans and specifications should be clear and specific as to the work being done, including how, where and how much. The simpler the system is, the fewer things can go wrong. Make the item tough to withstand vandalism. Do not skimp on quality when you will pay for it in maintenance. For example, automatic irrigation systems can save maintenance money and will save considerable expense over trying later to convert a non-automatic irrigation system. An item two times as expensive may last three or four times as long.

For restroom facilities, split-face concrete block in tans or earth tones with good ventilation and lighting are less likely to be vandalized than a wooden structure or straight-faced gray block. Some prefabbed metal structures are fairly vandal-proofed, but not all meet current handicap standards. Skylights save energy and money.

CONTRACT DOCUMENTS

If a project is to be bid, the Department will need to review the bid information and forms, the general conditions, the special conditions, the plans and the specifications.

The bid information should include the notice to contractors or bidders, the instruction to bidders, the bid sheets or forms, the information sheets on the bidder and subcontractors and the contract agreement. It is usually best not to put the engineer's estimate into the bid package since it may influence the bidding of the project.

FORCE ACCOUNT SCHEDULE

INTRODUCTION

Remember that the Engineer from the State who reviews your plans and instructions has not seen the project site and is not familiar with the project. Your plans, instructions, and facility/materials cost estimate is known collectively as a Force Account Schedule. The schedule should be written in a way that the project could be built from those instructions. You need to include information about what, how many, where and how the work is to be done. We need to understand how the project will be built and the steps you intend to take to accomplish the work.

OBTAIN LEGAL ADVICE

Preparation of the Force Account Schedule should be initiated only after you have consulted your attorney and obtained legal advice to determine how much money your agency can legally spend using the force account approach. Though State law has identified certain exceptions from the legal force account definition and spending limits, a force account schedule will always be required for grant purposes when you do not intend to develop a project using formal bid contract procedures.

CRITERIA FOR REVIEW OF THE FORCE ACCOUNT SCHEDULE

The main criteria that will be used in evaluating the schedule are 1) the steps for project development have been well thought out, 2) that visitor safety has been considered throughout, and 3) that the work is being done legally. Specific attention will be given to handicap access to restrooms, structures, walkways and other facilities. A construction plan or schematic must be submitted along with a step-by-step description of the work process.

WHAT TO SUBMIT (See Sample Force Account Schedule)

A) Transmittal letter - include the following information

1. Project name and number
2. Priority list - list of construction items in priority order
3. Brief description and statement of need for each priority
4. Time frame for completion
5. Who will supervise the project (agency)
6. Authorizing body (City Council, Board of Supervisors, Directors)

B) Construction Information - Step-by-step narrative on how each element of the project will be developed. Elements should correspond to the priority list

C) Scope - Indicate which construction elements will be included in the project to be funded by this grant.
D) Cost estimate

E) Project Plan or Schematic - drawn to scale, including signature block and date

SAMPLE FORCE ACCOUNT SCHEDULE FOR MYTHICAL PARK DEVELOPMENT

A) TRANSMITTAL LETTER

Project Officer (Name)
Local Assistance Section
Dept. of Parks & Recreation
P. O. Box 942896
Sacramento, CA 94296-0001

Dear

Mythical County Park Development
State Grant Number 84-590001

Enclosed for your review are plans and construction information and cost estimates for the work we propose to do at this park under this grant.

The order of priority for the construction of the items under this grant is:

1. Rip rap the creek
2. Sidewalk on Main Street
3. Pave off-street parking
4. Erect the old miner's cabin (labor and incidental material only)
5. Complete fence along Main Street
6. New sand for the playground.

If the grant does not cover the work, we will postpone lower priority items until we can raise the money from other sources.

Heavy winter storms of two years ago caused a lot of erosion on the creek bank and left steep banks which are a hazard to the children who play in the area. We plan to slope the bank back to a 1:1 slop and put in heavy boulder rip rap to make the area safer and stop future erosion.

Installation of concrete sidewalks will eliminate the serious problem arising from tracking of mud and sand from the present gravel walks into the museum. In addition, concrete walks will present a much neater appearance, and will substantially reduce the hardwood floor maintenance in the museum.

Paving of the parking lot will eliminate maintenance of the graveled area - now compounded by youngsters on motorcycles and in cars.

The old miner's cabin is a good example of broad axe and dovetail construction. It was taken down and put in storage some years ago. Rebuilding it will greatly enhance the museum's importance.

The existing split rail fence only goes halfway across the front of the property. Finishing the fence will give the park a better appearance and enhance security.

The sand cushion in the playground is getting thin as the children just naturally scatter it around. More sand keeps them from getting hurt when they fall off the equipment and they like playing in the sand.

We expect that the bulk of the improvements planned will be accomplished by force account during 198_ under the supervision of the _____ County Parks Department, as agent of the _____ County Board of Supervisors.

Please advise me if any additional information is needed.

Sincerely,

Director
_____ County Parks Department

B) CONSTRUCTION INFORMATION

MYTHICAL PARK
PROJECT NO. 84-59001
SPECIFICATIONS

RIP RAP OF CREEK

1. The creek will be graded back to a 1:1 slope from the end of Ten Cent Gulch to the park boundary (about 120'). Excess soil will be used to straighten the bank a little and fill in a couple of holes in the bank. Existing bushes and vines will not be disturbed if possible.

2. A base course of 24" diameter boulders will be placed in a trench by the side of the stream bed and a layer of 12" diameter boulders will be placed up the bank. (Most places, this will be 4' to 6').

3. We will try to interlock the boulders and will fill in the chinks and voids with rocks, sand and/or gravel. Hopefully, we will get enough soil in the voids that the vines and brambles will grow back.

SIDEWALKS

1. The existing gravel walk shall be excavated and graded to a finished depth of 4" below the top of the existing concrete curb.

2. Trees in the existing walkway shall be formed around as directed by the inspector.

3. Walk shall be constructed to County's sidewalk standard.

4. New walk will be about 4 1/2" wide, except that where it has to go around a tree, it will be at least 36" wide on one side of the tree and not less than 24" wide on the other side.

PAVE PARKING

1. The existing graveled parking area shall be graded, watered and rolled to a uniformly level surface.

2. Two inches of asphaltic concrete shall be placed by machine and rolled to a finished depth of one and one-half inches.

3. The finished surface shall be sealed with an emulsified liquid asphalt seal coat.

4. All work will be done to County standards by the company that has the County road contract for this year.

MINER'S CABIN

1. If sufficient funds are available, the old miner's log cabin (currently in storage) shall be erected according to the markings and sketches made during its disassembling. Original material shall be used as far as practical.

2. Replacement material shall be as nearly the same as the original pieces as can be obtained, and will be furnished by the County Parks Department.

3. The cabin shall be erected on a gravel base consisting of three inches of 3/4" x 1/4" crushed rock for drainage.

4. Cabin base logs shall be placed on rough heart redwood 2" x 12" laid level on the base gravel. Porch sills shall be laid on rough heart redwood 2" x 6" as above. All base logs, sills and joists shall be treated with clear wood preservative - Penta 5, Kenite 9 or equal.

5. The shake roof shall be laid shingle fashion. The first course to be doubled and subsequent courses laid 12" to the weather. Shakes to be furnished by the County Parks Department.

6. No electrical or plumbing work will be done at the cabin.

FENCE

1. About 135' of split rail fence shall be constructed along the west half of the south side of the park.

2. Posts shall be placed ten feet apart. Rails shall be selected for their stacking ability, and shall be stacked six rails high - forming a fence approximately three and one-half feet high.

3. Posts shall be prefabricated in pairs by placing a 4" by 4" x 24" redwood block between two posts six feet long and wiring them together with No. 9 galvanized wire.

4. A 4' wide gate built out of rail and hung off of heavy galvanized hinges will be located as shown on plan. (It will be just like the gate by the playground.)

SAND FOR PLAYGROUND

1. It will take about 15 yards of clean river sand to put 4" of sand over the existing playground.

C) SCOPE

The $13,000 from the State grant is the only source of funds for this project. We plan to complete Items 1 through 5 below. We may be able to complete Items 6 and 7 if we receive partial donation of materials.

D) COST ESTIMATES

1.	BOULDER RIP RAP. Approximately 600 sq. ft.	$3,200.00
2.	SIDEWALK. Approximately 610 sq. ft.	1,600.00
3.	RAIL FENCE. Labor, grading, gravel.	530.00
4.	PARKING LOT PAVING. Approximately 3,500 sq. ft. A.C.	7,100.00
5.	ENGINEERING, SUPERVISION AND MISC. LABOR.	500.00
6.	MINER'S CABIN.	700.00
7.	SAND. 15 yards at $4/yd.	100.00
	Total Grant Funds	$13,730,00

E) PLAN OR SCHEMATIC

The plan must be drawn to scale and be approved by the participant with a date and signature block. A sample is shown on the next page.

MYTHICAL PARK

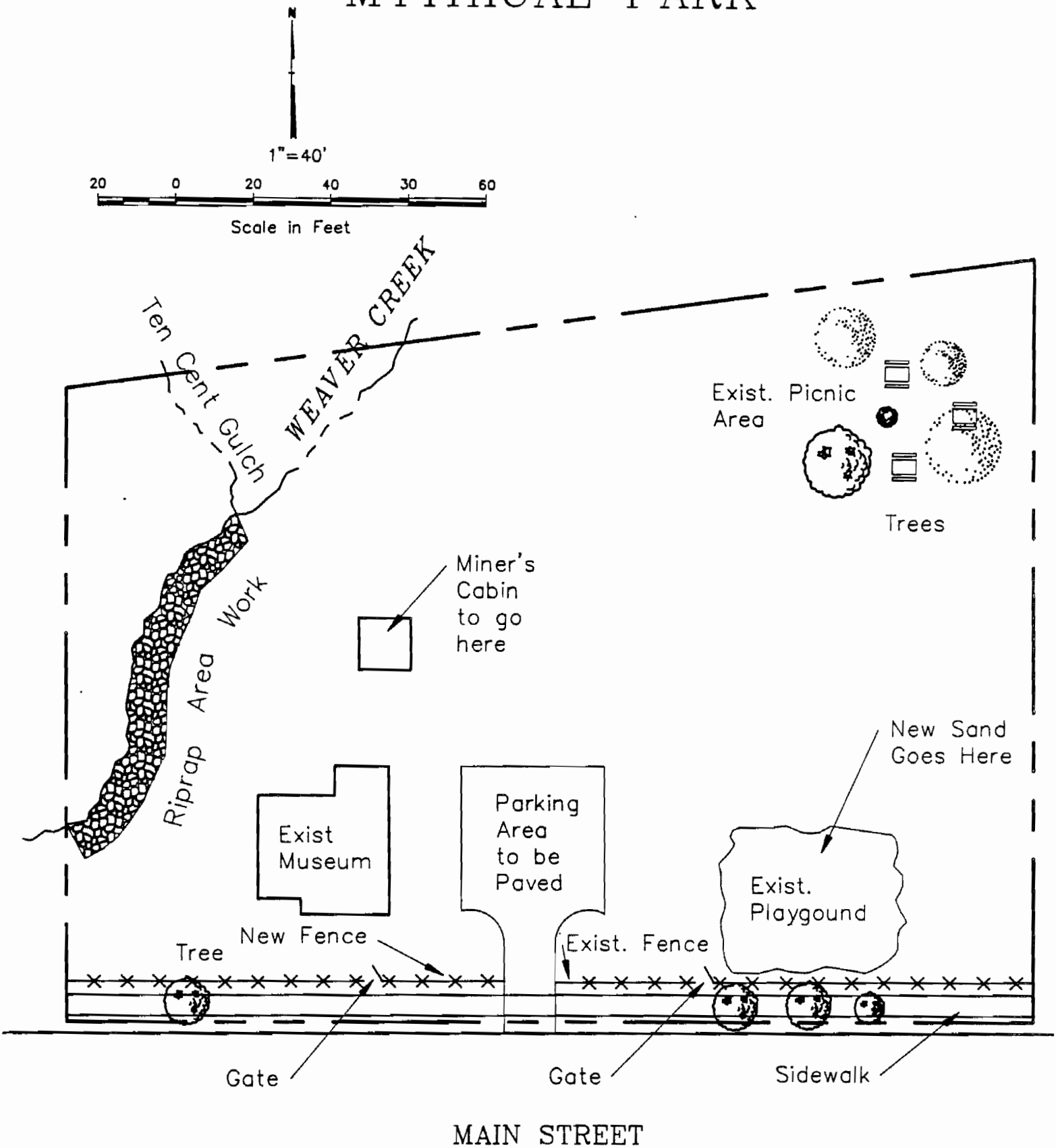

Project Name: _____ Signature: _____

Applicant: _____ Date: _____

STATE HANDICAPPED ACCESS LAW

The attached drawings and sketches are excerpts from, or clarifications of, the currently applicable State Handicapped Access Regulations. These regulations apply to all public buildings and supersede all local building codes.

Copies of the complete Handicapped Access Regulations are available from:

Office of the State Architect
Access Compliance Unit
1500 Fifth Street
Sacramento, CA 95814
(916) 445-6285

The Handicapped Access Code is entitled "Regulations for the Accommodation of the Disabled in Public Accommodations, From the State Building Code, Title 24, Parts 2, 3 and 5". Also of interest is "Title 24, Disabled Access Regulations, INTERPRETIVE MANUAL", available from the same source. Title 24 in its entirety can be obtained from:

State of California
Documents and Publications
P. O. Box 1015
North Highlands, CA 95660
(916) 924-4800

Further information is available from:

Department of Rehabilitation
Mobility and Communication Barriers Section
830 K Street
Sacramento, CA 95814
(916) 322-3078

RESTROOM DOORS

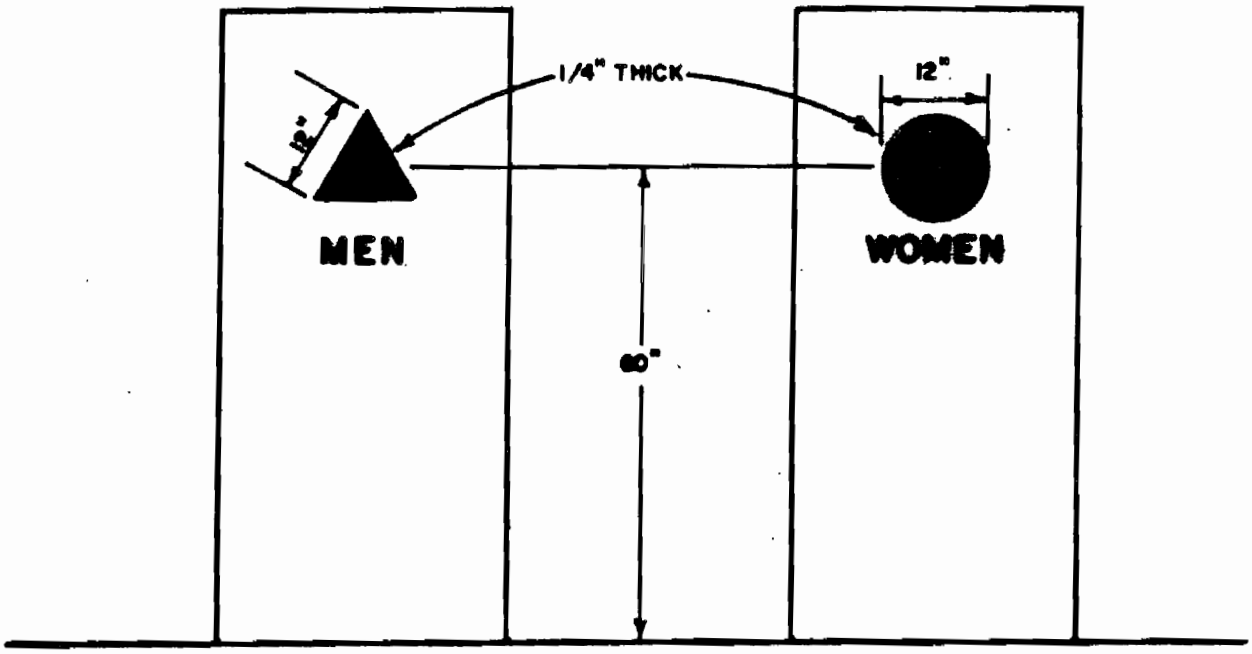

Part 2, Title 24, C.A.C. Section 2-1711, (e).3.

"On doorways leading to men's sanitary facilities, an equilateral triangle 1/4 inch (6.35mm) thick with edges 12 inches (304.8mm) and a vertex pointing upward and on women's sanitary facilities a circle 1/4 inch (6.35mm) thick and 12 inches (304.8mm) in diameter. These geometric symbols shall be centered on the door at a height of 60 inches (1524mm) and their color and contrast shall be distinctly different from the color and contrast of the door."

NEW RESTROOMS

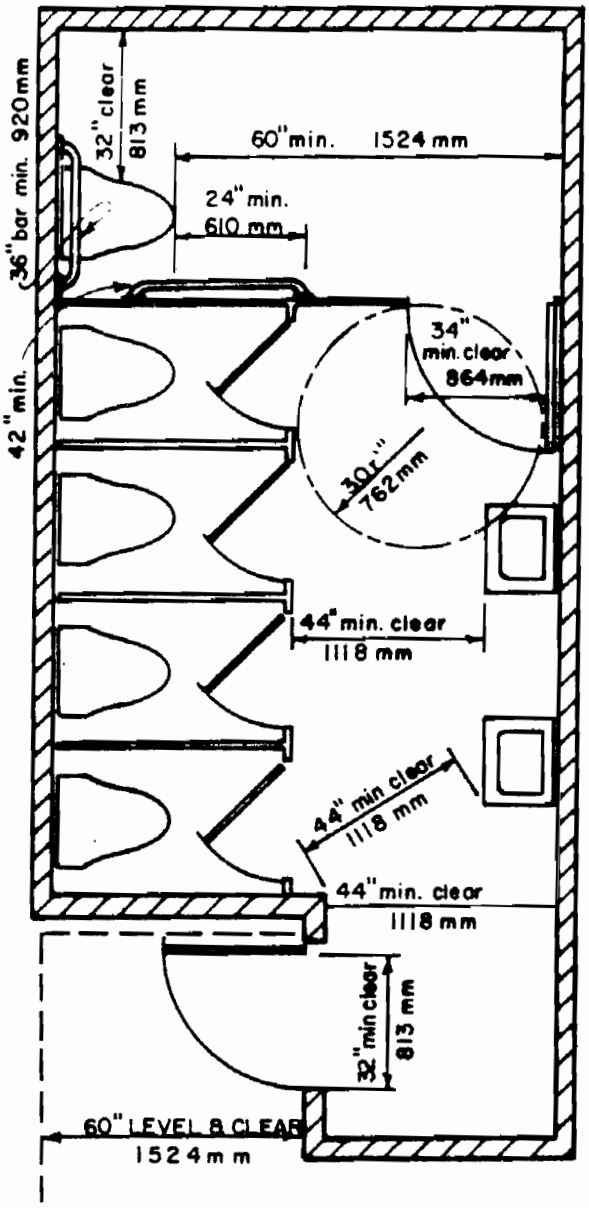

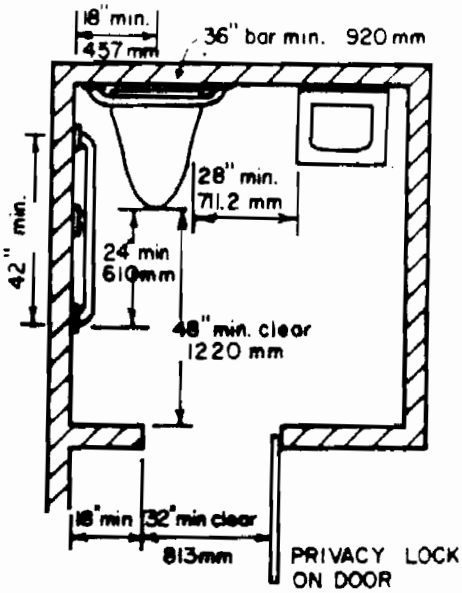

Privacy Toilet

Where the door is located in a corridor sidewall and swings into the corridor the minimum width of the corridor shall be 60" (1524mm) unless other state or local building codes allow a lesser corridor width.

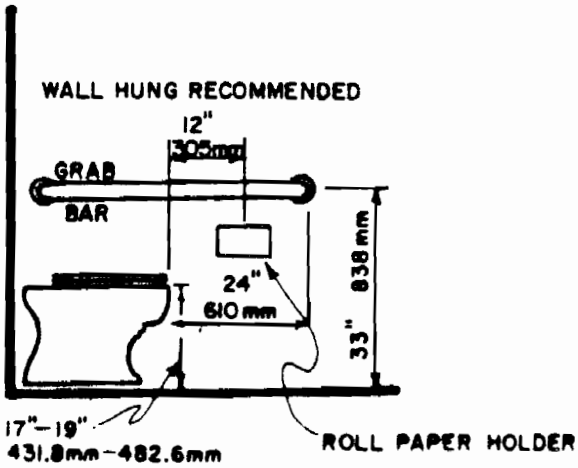

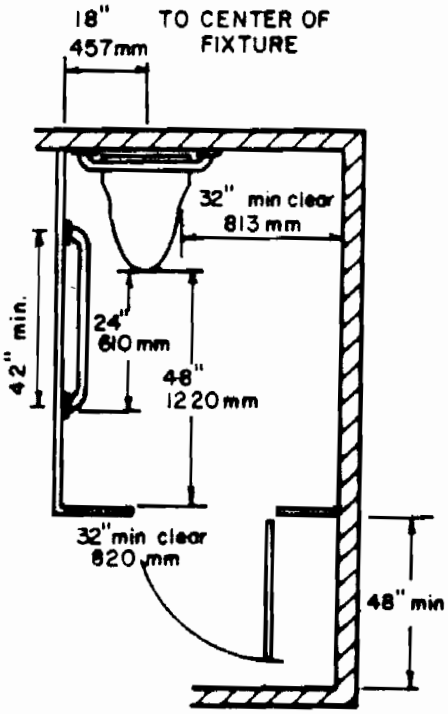

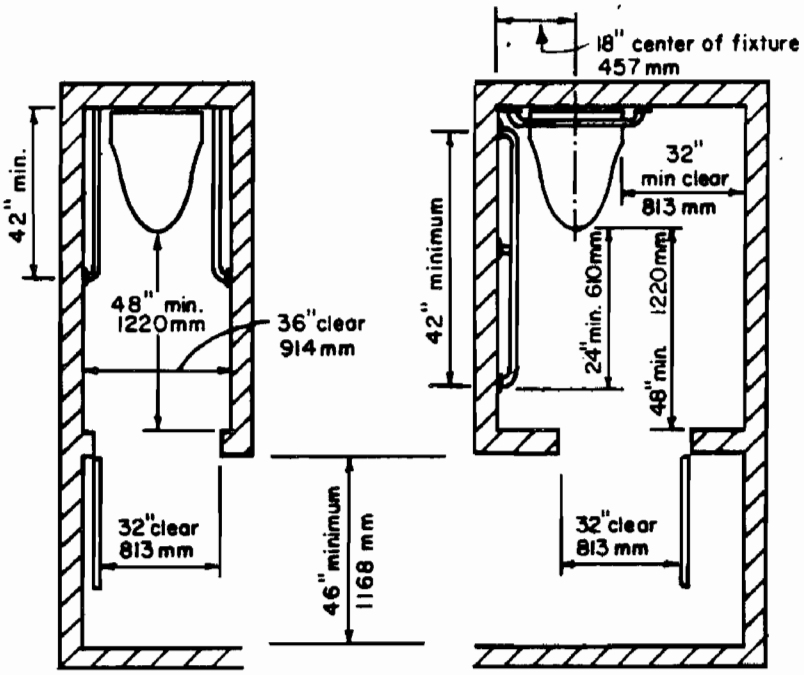

REMODELED RESTROOMS ONLY

DETAILS: ALL RESTROOMS

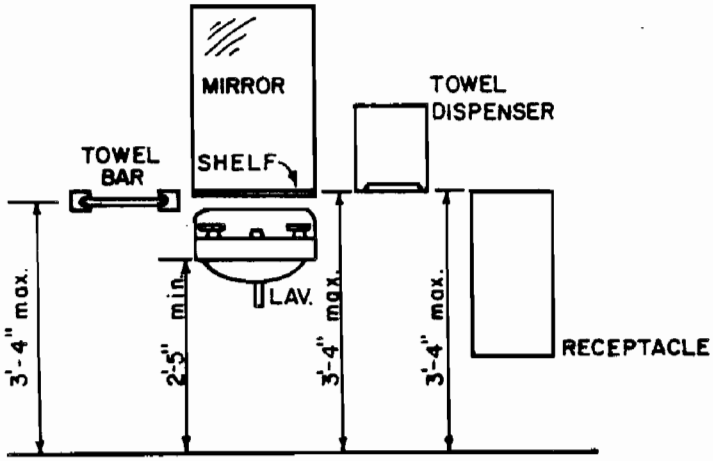

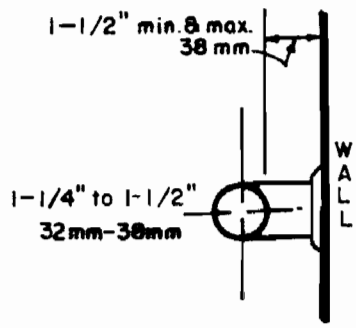

TURNAROUND SPACE

Each restroom must have a clear space measured from the floor to a height of 27" above the floor that is either 5'0" in diameter or else is a rectangle of at least 56" by 63" in size. No door may encroach into this space by more than 12" in any position.

RAMPS 1:12 OR FLATTER
LANDINGS 30' MAX.
WALKS 48" MIN. WIDTH
HALLS 44" MIN. WIDTH

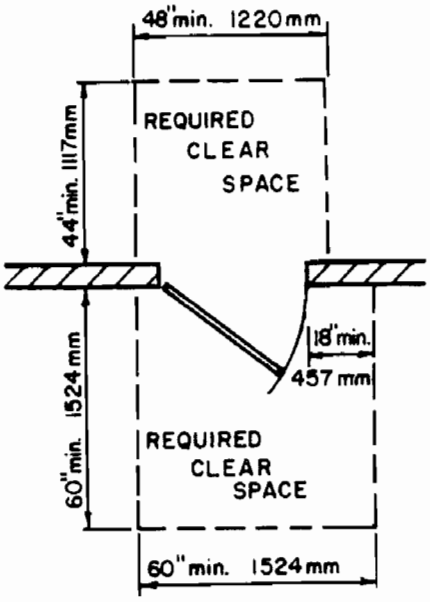

Note: Clear spaces must be level to prevent wheelchairs from rolling when occupant releases the wheel grips to reach for door, 1/4" slope per foot is allowed for drainage.

Note: Where doors open onto, but not into corridor, the required level floor beyond the door may be the minimum 44" corridor width.

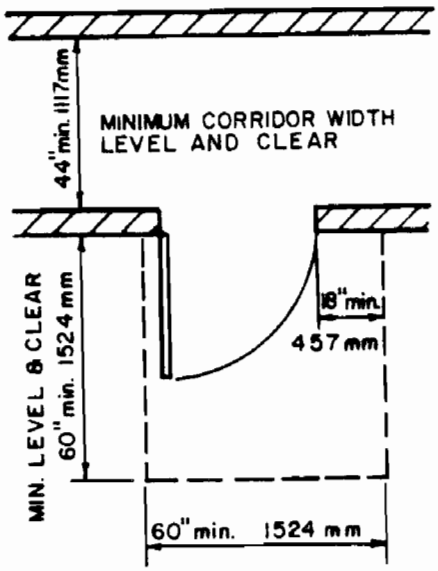

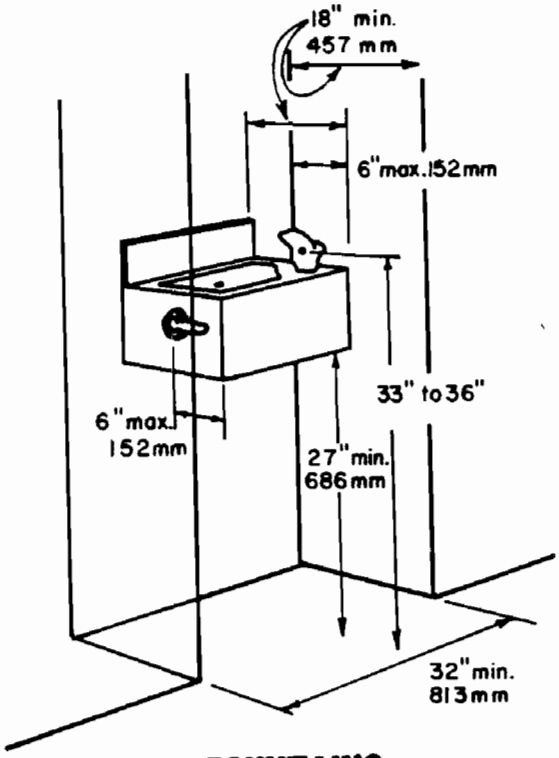

WATER FOUNTAINS

SHOWERS

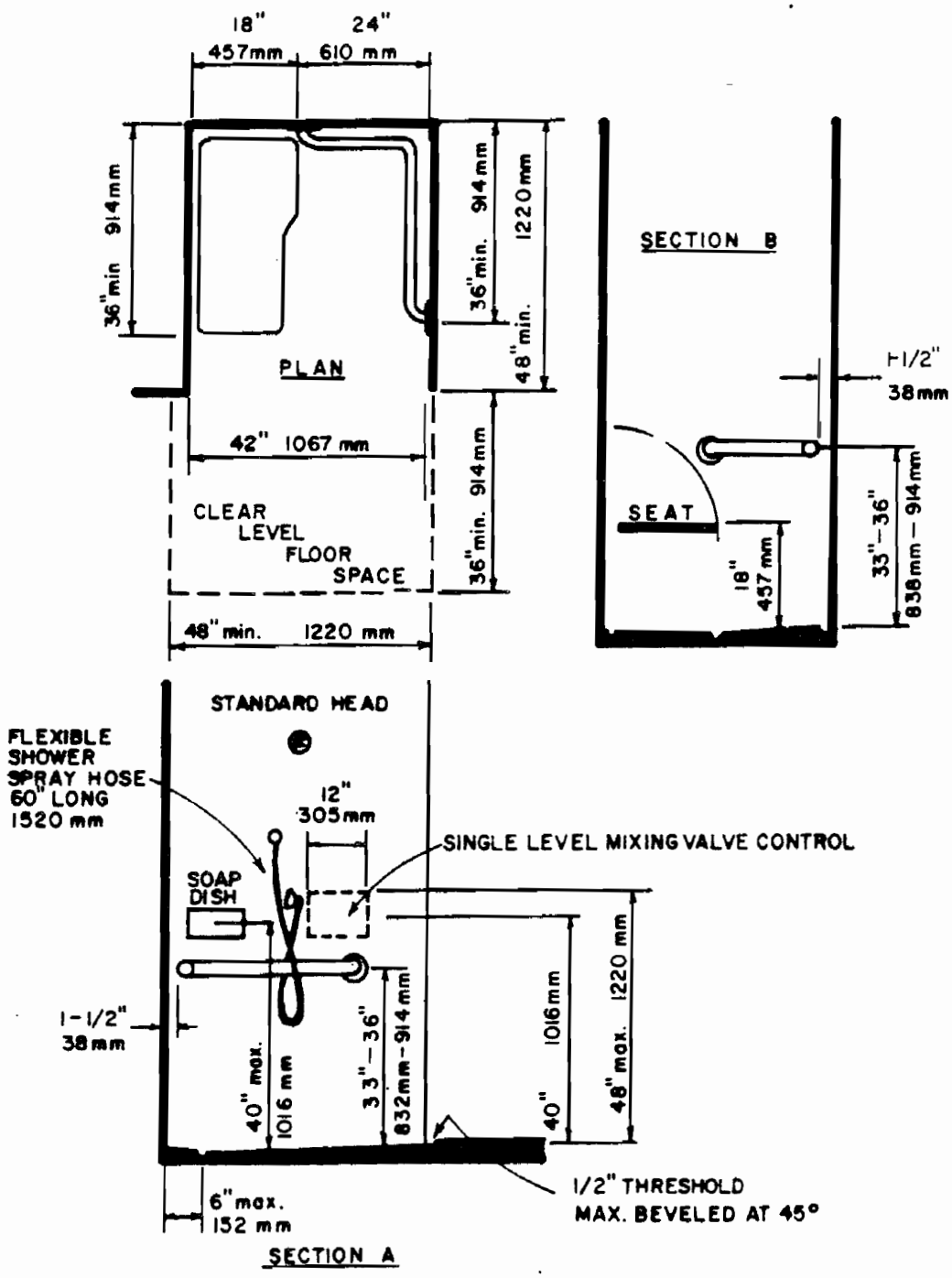

IN AREAS OF VANDALISM, use two wall mounted shower heads, one at 40 inches and one at the standard height. Each head must be able to swivel horizontally and vertically. Each one shall be controlled independently.

APPENDIX E

Acquisition Procedures

If you are contemplating a project involving acquisition, please contact the Local Assistance Section (916) 445-4441 for an Acquisition Guide

APPENDIX F

Payment Request Form

State of California – The Resources Agency
DEPARTMENT OF PARKS AND RECREATION

PAYMENT REQUEST
State Grant Programs

1. Check Box for Appropriate Grant Program (Do Not Combine Two or More Programs or Projects on One Request)

( ) Roberti-Z'berg-Harris Urban Grant Program ( ) 1984 Bond Act ( ) 1988 Bond Act

( ) 1980 Bond Act ( ) 1986 Bond Act ( ) Other

2. All the Information Needed for the Next Four Lines is Shown on Your Agreement

Project Title _____

Grant Recipient _____

Project Number _____ DPR Contract Number _____

Item No. _____

3. Payment Request Number _____ Advance ( ) Reimbursement ( ) Final ( )

4. Total Project Expenditures to Date

A. Acquisition

(1) Real Property $ _____
(2) Relocation $ _____
(3) Other $ _____
(4) Total $ _____

B. Development

(1) Consultant Services $ _____
(2) Contracts $ _____
(3) Labor $ _____
(4) Materials and Supplies $ _____
(5) Equipment Rentals $ _____
(6) Other $ _____
(7) Total $ _____

5. Payment Request

(a) Total Grant Amount $ _____

(b) Grant Funds Received to Date $ _____

(c) Remaining (a minus b) $ _____

(d) AMOUNT OF THIS PAYMENT REQUEST [ ]

6. Remaining Grant Funds after this Payment $ _____

7. Make Warrant Payable to:

_____

Address _____

Certification

I certify, that the above information is correct and that all funds received have or will be expended in accordance with the approved agreement for state grant moneys.

_____ _____ _____
(Signed Name – Must be Person Authorized in Resolution) (Title) Date

Approved for Payment:

_____ _____
(Signed) State Department of Parks and Recreation Date

DPR 212 (Rev. 6/88) (over)

INSTRUCTIONS FOR COMPLETING PAYMENT REQUEST

The following instructions are keyed to corresponding items in the Payment Request Form:

1. Check appropriate box.

2. Project Title — **Identical** with that shown on the project agreement front page. For 1986 Bond Act, the name on the Application and Project Summary Form.

   Grant Recipient — As shown on the project agreement

   Project Number — Upper right hand corner of agreement. For 1986 Bond Act, the number assigned by the State to the project(s) on the Application and Project Summary Form.

   DPR Contract Number — Upper left portion of Certification of Funding section on bottom on third of project agreement

   Item in the middle of the Certification of Funding section on the project agreement

3. Payment requests should be numbered in order for each project (1-2-3 etc.) Check advance for all payment requests except the final payment.

4. List expenditures to date.

5. (a) Shown on agreement. For 1986 Bond Act, that amount estimated for this project.

   (b) total of amount(s) already received. For 1986 Bond Act, amount received for this project.

   (c) (a minus b)

   (d) Amount you are requesting. For 1986 Bond Act, requesting for this project.

6. (c minus d).

7. Name, title, jurisdiciton, and address that check is to be mailed to.

   Certification — This must be signed by the person authorized in the resolution passed by the applicant's governing body.

APPENDIX G

Support Material for Final Payment

Support Material for Final Payment

1. Four copies of payment request, DPR 212, signed by person authorized in application resolution.

2. Description of completed project, including parcel numbers acquired and/or facilities developed by each contract and/or force account.

3. Summary of costs, including:

   a. Warrant numbers
   b. Amount of warrants
   c. Date of warrants
   d. Recipients of warrants
   e. Purpose of expenditures
   f. Force account labor costs, including employee name & number, job title, number of hours worked, dates, amount with fringe benefits, work performed.
   g. Equipment costs, including type of equipment, license number, number of hours used, dates, amount, work performed.

4. List any reimbursement for above expenditures, including amounts, sources, purposes, dates received.

5. Copy of Award of Contract for each contract, showing date awarded, name of contractor, and contract amount.

6. Notice of Completion and acceptance of contract for each contract.

7. Amount of interest earned on advance payments.

8. Certification that final payments made on all expenditures and no other reimbursement has been or will be received by your agency for which payment still has to be made.

APPENDIX H

Project Agreement

State of California — The Reources Agency
DEPARTMENT OF PARKS AND RECREATION

PROJECT AGREEMENT

CALIFORNIA WILDLIFE, COASTAL, AND PARK LAND CONSERVATION ACT

APPLICANT _____

PROJECT TITLE _____ PROJECT NUMBER _____

PROJECT PERFORMANCE PERIOD IS July 1, 19 to June 30, 19

Under the terms and conditions of this agreement, the applicant agrees to complete the project as described in the project description, and the State of California, acting through its Director of Parks and Recreation pursuant to the California Wildlife, Coastal, and Park Land Conservation Program, agrees to fund the project up to the total state grant amount indicated.

PROJECT DESCRIPTION:

Total State Grant not to exceed $ _____

_____
Applicant

By _____
Signature of Authorized Representative

Title _____

Date _____

By _____

Title _____

Date _____

The General Provisions attached are made a part of and are incorporated into the Agreement.

STATE OF CALIFORNIA
DEPARTMENT OF PARKS AND RECREATION

By _____

Date _____

CERTIFICATION OF FUNDING

CONTRACT NUMBER		FUND CALIFORNIA WILDLIFE, COASTAL, AND PARK LAND CONSERVATION FUND OF 1988			
PROJECT NO.	AMOUNT OF THIS ESTIMATE	APPROPRIATION			
UNENCUMBERED BALANCE $	ITEM NO.		CHAPTER	STATUTES	FISCAL YEAR
ADJ. INCREASING ENCUMBRANCE $		FUNCTION			
ADJ. DECREASING ENCUMBRANCE $		LINE ITEM ALLOTMENT			
I hereby certify upon my own personal knowledge that budgeted funds are available for this encumbrance.				T.B.A. No.	B.R. No.
SIGNATURE OF ACCOUNTING OFFICER				DATE	

DPR 809 (8/88)

CALIFORNIA WILDLIFE, COASTAL, AND PARK LAND CONSERVATION ACT
TRAILS

Project Agreement
Special Provisions

Notwithstanding any other provision of this agreement, grant moneys shall be encumbered by the Applicant within three years of the date when the appropriation became effective. Said date of appropriation is July 1, 19 .

Applicant agrees that lands acquired with grant moneys shall not be acquired through the use of eminent domain.

General Provisions

A. Definitions

1. The term "State" as used herein means the California State Department of Parks and Recreation.

2. The term "Act" as used herein means the California Wildlife, Coastal, and Park Land Conservation Act commencing with Section 5900 of the Public Resources Code.

3. The term "Project" as used herein means the project which is described on page 1 of this agreement.

4. The term "Applicant" as used herein means the party described as applicant on page 1 of this agreement.

5. The term "Application" as used herein means the individual application and its required attachments for grants pursuant to Section 5907 of the Public Resources Code and submitted to the State pursuant to Section 5914 and/or Section 5919 of the Public Resources Code.

B. Project Execution

1. Subject to the availability of grant moneys in the Act, the State hereby grants to the Applicant a sum of money (grant moneys) not to exceed the amount stated on page 1 in consideration of and on condition that the sum be expended in carrying out the purposes as set forth in the Description of Project on page 1 and under the terms and conditions set forth in this agreement.

   Applicant agrees to assume any obligation to furnish any additional funds that may be necessary to complete the project. Any modification or alteration in the project as set forth in the application on file with the State must be submitted to the State for approval.

2. Applicant agrees to complete the Project in accordance with the time of project performance set forth on page 1, and under the terms and conditions of this agreement.

3. Applicant shall comply as lead agency with the California Environmental Quality Act (Public Resources Code, Section 21000, et. seq.

4. If the Project includes development, the development plans and specifications or force account schedule shall be reviewed and approved by the State.

5. Applicant agrees to secure completion of the development work in accordance with the approved development plans and specifications or force account schedule.

6. Applicant agrees to permit periodic site visits by the State to determine if development work is in accordance with the approved plans and specifications or force account schedule, including a final inspection upon Project completion.

7. Applicant agrees to submitt all significant deviations from the Project to the State for prior approval.

8. If the Project includes acquisition of real property Applicant agrees to comply with Chapter 16 (commencing with Section 7260) of Division 7 of Title 1 of the Government Code and any applicable federal, state, or local laws or ordinances. Documentation of such compliance will be made available for review upon request by the State.

9. Applicant agrees to furnish State preliminary title reports respecting such real property or such other evidence of title which is determined to be sufficient by State. Applicant agrees in negotiated purchases to correct prior to or at the close of escrow any defects of title which in the opinion of State might interfere with the operation of the Project. In condemnation actions such title defects must be eliminated by the final judgment.

10. Applicant agrees to provide for reasonable public access to lands acquired in fee with grant moneys except where that access may interfere with habitat protection.

C. Project Costs

The Grant moneys to be provided Applicant under this agreement may be disbursed as follows:

1. If the Project includes acquisition of real property, the State may disburse to Applicant the grant moneys as follows, but not to exceed in any event the State grant amount set forth on page 1 of this agreement:

   a. When acquisition is through negotiated purchase, State may disburse the amount of the State approved purchase price together with State approved costs of acquisition.

   b. When acquisition is allowed pursuant to this Act through proceedings in eminent domain, State may disburse the amount of the total award as provided for in the final order of condemnation together with State approved costs of acquisition.

   c. In the event Applicant abandons such eminent domain proceedings, Applicant agrees to bear all costs in connection therewith and that no grant moneys shall be disbursed for such costs.

2. If the Project includes development, after approval by State of Applicant's plans and specifications or force account schedule and after completion of the Project or any phase or unit thereof, State may disburse to Applicant upon receipt and approval by State of a statement of incurred costs from Applicant, the amount of such approved incurred costs shown on such statement, not to exceed the State grant amount set forth on page 1 of this agreement, or any remaining portion of such grant amount to the extent of such statement. State may disburse up to 100% of the State grant amount allocated for development upon receipt and approval by State of Applicant's plans and specifications or force account schedule.

   The statements to be submitted by Applicant shall set forth in detail the incurred or estimated cost of work performed or to be performed on development of the Project and whether performance will be by construction contract or by force account. Statements shall not be submitted more frequently than ninety day periods unless otherwise requested by State.

   Modifications of the development plans and specifications and/or force account schedule must be approved by State prior to any deviation from the State approved plans and specifications and/or force account schedule unless previously authorized by the State.

D. Project Administration

1. Applicant agrees to promptly submit such reports as the State may request.

   In any event Applicant shall provide State a report showing total final Project expenditures.

2. Applicant agrees that property and facilities acquired or developed pursuant to this agreement shall be available for inspection upon request by the State.

3. Applicant agrees to use any moneys advanced by the State under the terms of this agreement solely for the Project herein described.

4. If grant moneys are advanced, the Applicant agrees it should place such moneys in a separate interest bearing account, setting up and identifying such account prior to the advance, interest earned on grant moneys shall be used on the project or paid to the State. If grant moneys are advanced and not expended, the unused portion of the grant shall be returned to the State within 60 days of completion of the Project or end of the Project performance period, whichever is earlier.

5. Applicant agrees that income earned by the Applicant from a State approved non-recreational use on the Project shall be used for recreational purposes at the Project, or, if approved by the State, for recreational purposes within the Applicants jurisdiction.

E. Project Termination

1. Applicant may unilaterally rescind this agreement at any time prior to the commencement of the Project. After Project commencement this agreement may be rescinded, modified or amended by mutual agreement in writing.

2. Failure by the Applicant to comply with the terms of this agreement or any other agreement under the Act may be cause for suspension of all obligations of the State hereunder.

3. Failure of the Applicant to comply with the terms of this agreement shall not be cause for the suspension of all obligations of the State hereunder if in the judgment of the State such failure was due to no fault of the Applicant. In such case, any amount required to settle at minimum cost any irrevocable obligations properly incurred shall be eligible for reimbursement under this agreement.

4. Because the benefit to be derived by the State, from the full compliance by the Applicant with the terms of this agreement, is the preservation, protection and net increase in the quantity and quality of parks, public recreation facilities and/or historical resources available to the people of the State of California and because such benefit exceeds to an immeasurable and unascertainable extent the amount of money furnished by the State by way of grant moneys under the provisions of this agreement, the Applicant agrees that payment by the Applicant to the State of an amount equal to the amount of the grant moneys disbursed under this agreement by the State would be inadequate compensation to the State for any breach by the Applicant of this agreement. The applicant further agrees therefore, that the appropriate remedy in the event of a breach by the Applicant of this agreement shall be the specific performance of this agreement, unless otherwise agreed to by the State pursuant to Section 5919 (b), Public Resources Code.

5. Applicant and State agree that if the Project includes development final payment may not be made until the Project conforms substantially with this agreement and is a useable public recreation facility.

F. Hold Harmless

1. Applicant agrees to waive all claims and recourse against the State including the right to contribution for loss or damage to persons or property arising from, growing out of or in any way connected with or incident to this agreement except claims arising from the concurrent or sole negligence of State, its officers, agents, and employees.

2. Applicant agrees to indemnify, hold harmless and defend State, its officers, agents and employees against any and all claims demands, damages, costs, expenses or liability costs arising out of the acquisition, development, construction, operation or maintenance of the property described as the Project which claims, demands or causes of action arise under Government Code Section 895.2 or otherwise except for liability arising out of the concurrent or sole negligence of State, its officers, agents, or employees.

3. Applicant agrees that in the event State is named as codefendant under the provisions of Government Code Section 895 et seq., the Applicant shall notify State of such fact and shall represent State in the legal action unless State undertakes to represent itself as codefendant in such legal action in which event State shall bear its own litigation costs, expenses, and attorney's fees.

4. Applicant and State agrees that in the event of judgment entered against the State and Applicant because of the concurrent negligence of the State and Applicant, their officers, agents, or employees, an apportionment of liability to pay such judgment shall be made by a court of competent jurisdiction. Neither party shall request a jury apportionment.

5. Applicant agrees to indemnify, hold harmless and defend the State, its officers, agents and employees against any and all claims, demands, costs, expenses or liability costs arising out of legal actions pursuant to items to which the Applicant has certified. Applicant acknowledges that it is solely responsible for compliance with items to which it has certified.

G. Financial Records

1. Applicant agrees to maintain satisfactory financial accounts, documents and records for the Project and to make them available to the State for auditing at reasonable times. Applicant also agrees to retain such financial accounts, documents and records for three years following project termination or completion.

   Applicant and State agree that during regular office hours each of the parties hereto and their duly authorized representatives shall have the right to inspect and make copies of any books, records or reports of the other party pertaining to this agreement or matters related thereto. Applicant agrees to maintain and make available for inspection by the State accurate records of all of its costs, disbursements and receipts with respect to its activities under this agreement.

2. Applicant agrees to use any generally accepted accounting system.

H. Use of Facilities

1. Applicant agrees that the property acquired or developed with grant moneys under this agreement shall be used by the Applicant only for the purpose for which the State grant moneys were requested and no other use of the area shall be permitted except by specific act of the Legislature.

2. Applicant agrees to maintain and operate the property acquired, developed , rehabilitated or restored with grant monies in perpetuity subject to the provisions of Public Resource Code Section 5917. With the approval of State, the applicant or its successors in interest in the property may transfer the responsibility to maintain and operate the property in accordance with Section 5919.

I. Nondiscrimination

1. The Applicant shall not discriminate against any person on the basis of sex, race, color, national origin, age, religion, ancestry, or physical handicap in the use of any property or facility acquired or developed pursuant to this agreement.

2. The Applicant shall not discriminate against any person on the basis of residence except to the extent that reasonable differences in admission or other fees may be maintained on the basis of residence and pursuant to law.

3. All facilities shall be open to members of the public generally, except as noted under the special provisions of this project agreement.

J. Application Incorporation

The Application and any subsequent change or addition approved by the State is hereby incorporated in this agreement as though set forth in full in this agreement.

K. Severability

If any provision of this agreement or the application thereof is held invalid, that invalidity shall not affect other provisions or applications of the agreement which can be given effect without the invalid provision or application, and to this end the provisions of this agreement are severable.

APPENDIX I

Addendum to CEQA

Addendum to CEQA

The procedure for updating CEQA documents previously submitted to the California Department of Parks and Recreation, Local Assistance Section, is as follows:

1) If the project is substantially the same as the one previously submitted, and was exempt from CEQA, the applicant shall determine if it is still exempt, and attach that determination to the resubmitted application.

2) If the project is substantially the same as the one previously submitted, and Section 15164 of Title 14, Div. 6 of the California Administrative Code does not apply, the representative of the applicant's planning agency will certify by signing and attaching to the resubmitted application the following statement:

   I certify, to the best of my knowledge, that Section 15164 of Title 14, Div. 6 of the California Administrative Code does not apply to the project described in the California Wildlife, Coastal, and Park Land Conservation Bond Act of 1988 Application for Local Assistance Grant, resubmitted on __ (date)_____.

   Signed_____.
   Representative of Applicant's Planning Agency

3) If the project is substantially the same as the one previously submitted, and Section 15164 does apply, an addendum to the EIR or negative declaration shall be prepared by the applicant, and attached to the resubmitted application.

4) If the project previously submitted has changed, a subsequent EIR/negative declaration per section 15162 or supplement to an EIR/negative declaration per Section 15163 shall be attached to the resubmitted application. If the changed project is exempt, the applicant shall attach to the resubmitted application the new exemption form showing the county clerk's filed date stamp.